HSF RoHS

REV	ECN NO	DESCRIPTION	DATE	NAME
A		NEW		

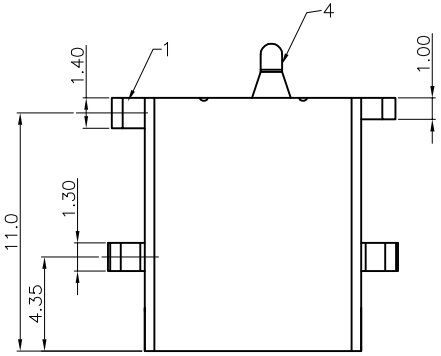

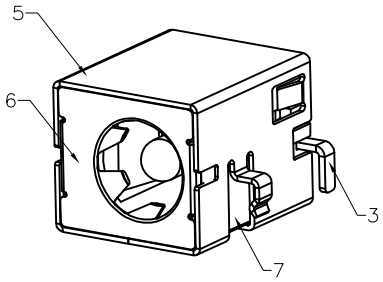

SCHEMATIC

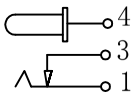

SPECIFICATION
1. Rating:DC 30V 2.5A
2. Contact resistance:≤0.03Ω
3. Insulation resistance:≥100MΩ (DC250V)
4. Withstand voltage:500VAC
5. Insertion and eatraction force:3-25N
6. Life test:5000 cycles.

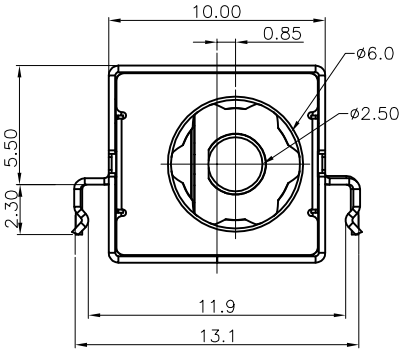

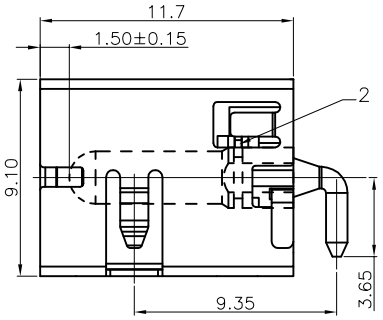

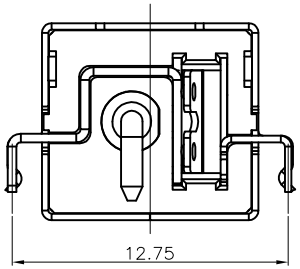

Ordering Information

L780 25 - 60 1 0 XX X

- Mandrel diameter 25=ø2.5MM
- Hole Diamete 60=ø6.0MM
- Welding method 1=Right Dip Type
- structure 0=Four encircling
- Serial NO. 01-99
- Packing C=Tray D=Reel

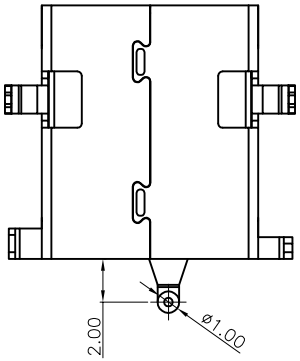

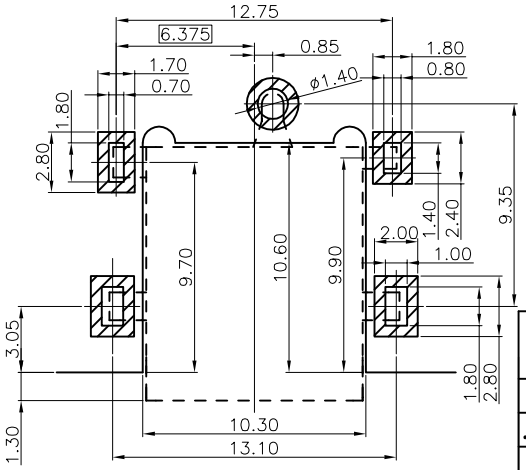

PCB LAYOUT (±0.05)

NO.	DESCRIPTION	QTY	MATERIAL	PLATING
7	HOUSING	1	LCP/PBT	
6	COVER	1	SUS	
5	SHELL	1	BRASS	Ni-Plating
4	PIN	1	BRASS	Ni-Plating
3	CURVE PIECE	1	BRASS	Ni-Plating
2	FIXING PIECE	1	SUS	
1	SPRING	1	BRONZE	Ni-Plating

STANDARD TOLERANCE (EXCEPT SPECIFIED)			
LINER		ANGLES	
.0	±0.30	0.°	±3°
.00	±0.25	.0°	±2°
.000	±0.15	.00°	±1°

LDCONN 连大 东莞连大精密制品有限公司
DongGuan LianDa Precision Products Co., LTD

TITLE	DC JACK, Four encircling, Right DIP Type, H9.1	DRAWN BY	WZG	17.04.10
PART NO	L78025-6010XXX	CHECKED BY		
DRAWING NO		APPROVED BY		
SCALE 1:1	UNIT mm	PAGE 1/1	SIZE A4	